ABIDE BY ROHS

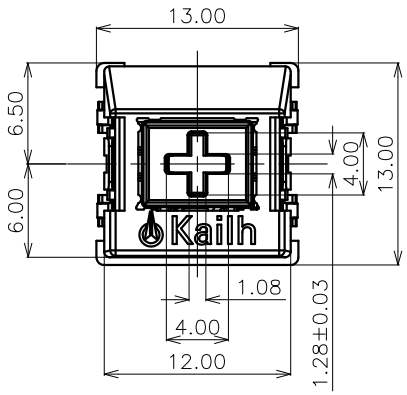

■ SWITCH FUNCTION

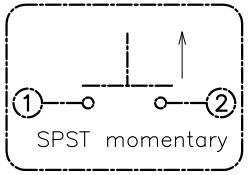

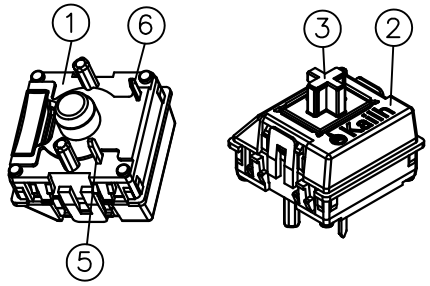

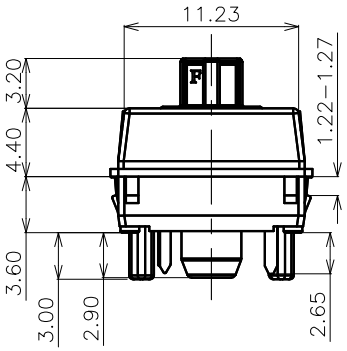

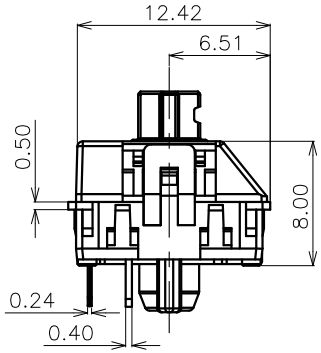

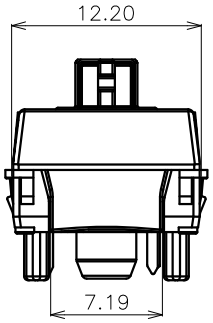

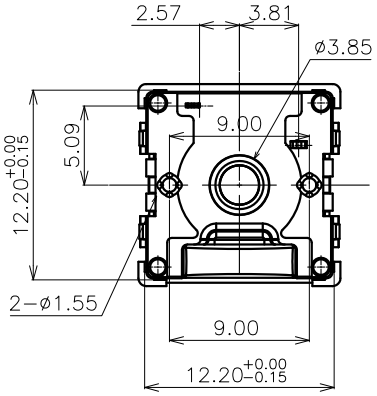

Click Tactile feel-Blue shaft

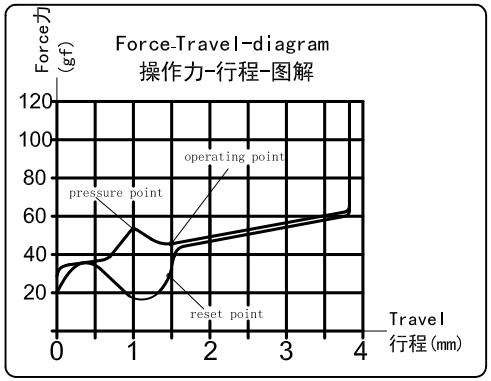

■ Specification :

- ●1.Rating:
  Voltage :12V AC/DC max.,2V DC min.
  Current: 10mA AC/DC max.,10μA DC min.
- ●2.Contact Resistance : 200mΩ Max
- ●3.Insulation Resistance :100MΩ at 100V
- ●4.Withstand Voltage :AC100V(50-60Hz) for 1 minute
- ●5.Bounce Time: ≤5msec (at 16 in/sec. actuation speed)
- ●6.Operation F
  orce :45±15gf
  (35-75gf for total travel)
- ●7.Pretravel:1.5±0.5mm
- ●8.Total travel:3.5±0.5mm
- ●9.Operating Life :50,000,000 Cycles
- ●10.For assembly more than 1X1.5 keycap, it need install a equalizing bar.

ITEM	PART NAME	TER'NO.	QTY.	MATERIAL	FINISHING	REMARK
⑥	Terminal B	——	1	Copper Alloy	——	——
⑤	Terminal A	——	1	Copper Alloy	——	——
④	LED	——	1	See led spec	R.G.B full color	——
③	Keystroke	——	1	POM	Nature	UL94HB
②	Cover	——	1	PC	——	——
①	Base	——	1	Nylon	——	——

APPROVALS		DATE	DONGGUAN CITY KAIHUA ELECTRONICS CO.,LTD
DRAWN	Chenjun	2015-3-25	
CHECKED			TITLE: PG1280 KeySwitches with LED
APPROVALS			PART NO. PG128001S03

TOLERANCES ARE			ANGLE	UNIT: mm	SCALE: 1:1	PROJ:
	30<L	±0.30				
	10<L≦30	±0.20				
	5<L≦10	±0.15	±2°	DRAWING NO. ——		SHEET 1 OF 2
	L≦5	±0.10				

ECN NO.	REV.	DATE.	DESCRIPTION.	CHANGE.	CHECK.	APPRO.
——	A	——	NEW	——	——	——

ABIDE BY ROHS

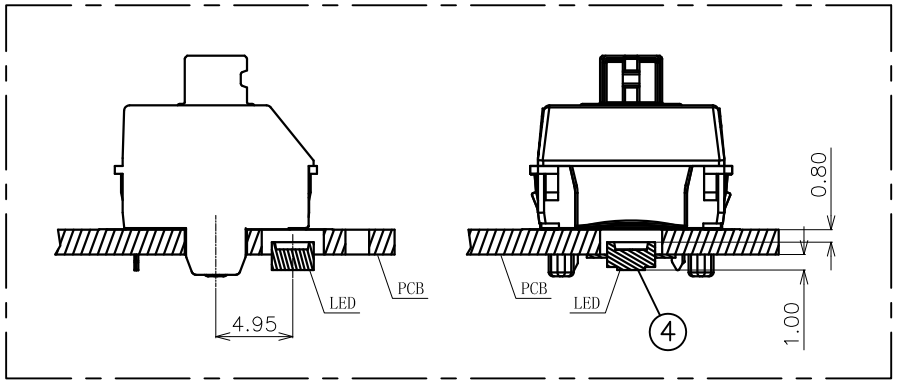

LED Assembly Drawing

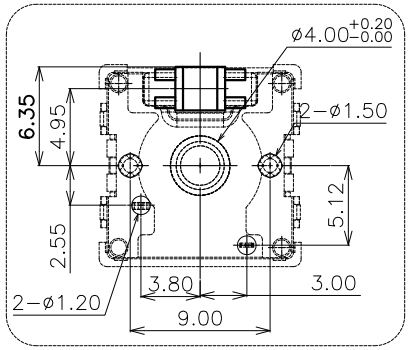

PCB Layout(Drilling patterns)

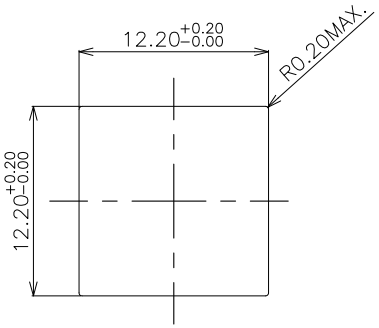

Matel frame
thickness:1.2±0.05mm
Matel frame cutout dimensions

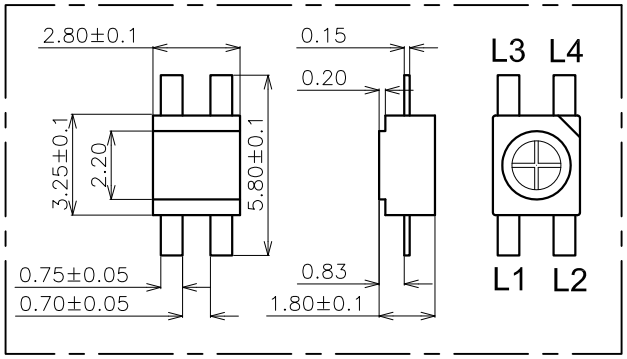

LED Drawing
SCALE 2:1

■ **R.G.B Full Color NO.(共阳)**

Colour \ Terminal No.	L1	L2	L3	L4
Red		●		●
Green	●			●
Blue			●	●

———	A	———	NEW	———	———	———
ECN NO.	REV.	DATE.	DESCRIPTION.	CHANGE.	CHECK.	APPRO.

APPROVALS		DATE	DONGGUAN CITY KAIHUA ELECTRONICS CO.,LTD
DRAWN	Chenjun	2015-3-25	Kaihua
CHECKED			TITLE: PG1280 KeySwitches with LED
APPROVALS			PART NO. PG128001S03
TOLERANCES ARE	30<L ±0.30; 10<L≤30 ±0.20; 5<L≤10 ±0.15; L≤5 ±0.10	ANGLE ±2°	UNIT: mm / SCALE: 1:1 / PROJ:
			DRAWING NO. ——— / SHEET 2 OF 2

PG128001S03 Keyswitch Specification

1. General specification 基本事项

1.1 Switch action : Push-on type, S. P. S. T
开关种类 : 按键开关,单刀单掷
1.2 Switch rating 额定值 : 12 VAC/DC max. 2 VDC min.10mA AC/DC max. 10μA DC min.
1.3 Operation temperature range 使用温度试验范围 : - 10 ～ +60℃
1.4 Storage temperature range 保存温度范围 : - 20 ～ + 60℃
1.5 Suggested storage period 贮存期限 : about 6 months 最多六个月
Require the tin part on the switch terminals should keep good after storage guarantee date
要求贮存期后开关端子部分上锡仍然良好
1.6 Appearance and dimensions 外形及尺寸 : See outside drawing page 见外形尺寸图
1.7 Led specification LED 规格 : See Led specification 见LED规格书（BZPG1583-08002）
1.8 Standard condition 试验、测定状态 Unless otherwise specified, the test and measurements shall be carried out as follows:
Ambient temperature 温 度: 20±2℃ Relative humidity 相对湿度: 45 ～ 85
Air pressure 气 压: 86 ～ 106kPa(860～1060mbar)
However, if doubt arises on the decision based on the measured
Values under the above-mentioned conditions, the following conditions shall be employed:
但是在对判定产生疑义时,按下述状态实施:
Ambient temperature 温 度:20±2℃ Relative humidity 相对湿度: 65±5%
Air pressure 气 压: 86 ～ 106kPa(860～1060mbar)

2. Performance 性能

2.1 Electrical characteristics 电气性能

No.	Item 项目	Test condition 试 验 条 件	Performance 规 格
2.1.1	Contact resistance 接触电阻	Push force: (Operation force) x 2。 测定时的负荷：操作方向动作力基准值的2 倍。 Measurement tool : Contact resistance meter 测定器：微电流接触电阻计(1kHz, 20mV, 5～50mA)	200mΩ MAX 200mΩ 以下
2.1.2	Insulation resistance 绝缘电阻	D. C. 100V(Between terminals) (端子间)	100MΩ min 100MΩ 以上
2.1.3	Withstand voltage 耐电压	AC 100V for 1 min (Between terminals) (端子间)	No. insulation destruction. 无绝缘破坏.
2.1.4	Bouncing 触点抖动	Operation speed : 3～4 times/s 操作速度： 每秒3～4 次 Oscillo scope 示波器 Switch Bouncing Test Circuit 抖动测定回路 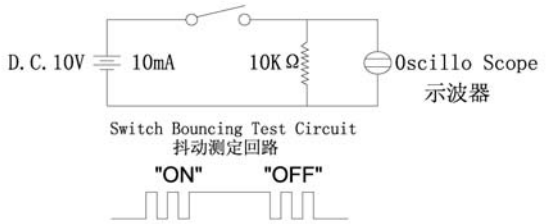	ON:5ms max 5ms以下 OFF:5ms max 5ms以下

REVISION	A版
	NEW

DONGGUAN CITY KAIHUA ELECTRONICS CO., LTD 东 莞 市 凯 华 电 子 有 限 公 司	WRITTEN BY	CHECKED BY	APPROVED BY
	Chenjun		

2.2 Mechanical Characteristics 机械性能

No.	Item 项目	Test condition 试验条件	Performance 规格
2.2.1	Operation force 动作力 Travel to closure 动作行程（见图表）	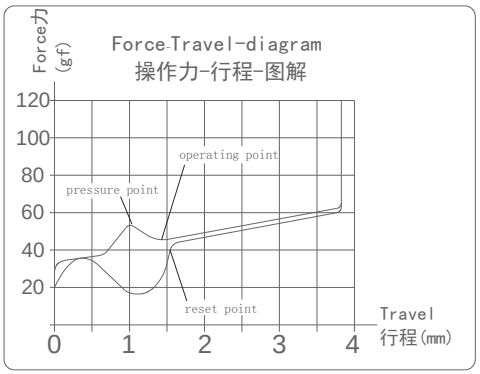	operating force 操作力：45±15gf Full Travel 全行程：3.5±0.5mm Pre Travel 预行程：1.5±0.5mm
2.2.2	Push strength 按压强度	50N(5Kgf)for 15 sec 50N(5Kgf) 15 秒 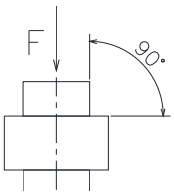	No damage (Electrical and mechanical) 无异常 (电气、机械性能)
2.2.3	Pull strength 推压强度	Break by drawing push plate in the direction of right diagram 抽拔推杆使其破坏的强度.	50N min (5kgf min)
2.2.4	Vibration test 耐振性	1) Amplitude 全振幅：1.5 mm 2) Sweep rate: 10-55-10HZ for 1 minute 扫描速度：10-55-10HZ 1 分钟 3) Sweep method: Logarithmic frequency sweep rate 扫描方式：对数频率扫描速度 4) Vibration direction : X, Y, Z(3 directions) 振动方向：X,Y, Z (3 方向) 5) Time : Each direction 2 hours (Total 6 hours) 时间：每个方向2 个小时(共6 个小时)	No.2.1 and 2.2.1 to 2.2.2 shall be satisfied 满足2.1 项和2.2.1 至2.2.2 项.
2.2.5	Soldering heat test 耐焊接热	端子焊接部分浸入焊炉，焊炉温度 260±5℃，焊接时间 5±1 秒。(焊接时不可于端子施加外力)。 Terminals shall be dipped in the solder bath at 260±5℃ for 5±1 seconds without additional force for terminals.	No damage (electrical and mechanical) 无异常 （气、机械特性）
2.2.6	Solderbility 可悍性	After sprated flux / 涂上助焊剂后 temperature :260± 5℃ / 温度：260± 5℃ soldering time :2±0.5 sec/ 焊接时间:2±0.5 秒	70% or more of surface area of the portion immersed in solder shall be covered by new solder / 70% 或更多的浸焊面能被焊锡覆盖.

REVISION	A 版
	NEW

DONGGUAN CITY KAIHUA ELECTRONICS CO., LTD 东 莞 市 凯 华 电 子 有 限 公 司	WRITTEN BY	CHECKED BY	APPROVED BY
	Chenjun		

2.3 Climatic characteristics 耐候性能

No.	Item 项目	Test condition 试验条件	Performance 规格
2.3.1	Cold test 耐寒性	1) Temperature : - 20±2℃ 温度：- 20±2℃ 2) Duration of test: 48h 持续时间：48 小时 3) Take off a drop water 去掉水珠 4) Standard conditions after test : 1h 试验后的放置条件：1 小时	Contact resistance 200mΩ max No. 2.1.2 to 2.1.4 and No. 2.2.1 to 2.2.2 shall Be satisfied 接触电阻 200mΩ以下 满足2.1.2 到2.1.4 项、 2.2.1 到2.2.2 项.
2.3.2	Heat test 耐热性	1) Temperature : 60±2℃ 温度： 60±2℃ 2) Duration of test: 48h 持续时间：48 小时 3) Standard conditions after test : 1h 试验后的放置条件：1 小时	Contact resistance 200mΩ max No. 2.1.2 to 2.1.4 and No. 2.2.1 to 2.2.2 shall Be satisfied 接触电阻 200mΩ以下 满足2.1.2 到2.1.4 项、 2.2.1 到 2.2.2 项.
2.3.3	Temperature cycle 温度循环	1) Test cycles :20 cycles 试验周期：20 个周期 2) Standard condition after test :1h 试验后的放置条件：1 小时	Contact resistance 200mΩ max No. 2.1.2 to 2.1.4 and No. 2.2.1 to 2.2.2 shall be satisfied 接触电阻 200mΩ以下 满足2.1.2 到2.1.4 项、 2.2.1 到2.2.2 项.
2.3.4	Humidity test 耐湿性	1) Temperature : 60±2℃ 温度：60±2℃ 2) relative humidity: 90~95% 相对温度:90~95% 3) Duration of test: 96h 持续时间：96 小时 3) Take off a drop water 去掉水珠 5) Standard conditions after test : 1h 试验后的放置条件：1 小时	Contact resistance 200mΩ max No. 2.1.2 to 2.1.4 and No. 2.2.1 to 2.2.2 shall Be satisfied 接触电阻 200mΩ以下 满足2.1.2 到2.1.4 项、 2.2.1 到2.2.2 项.

1 cycle 一次 循环	temperature 温度	duration of test 持续时间	
	20±5℃	1h	
	-40±2℃	1h	
	20±5℃	1h	
	60±5℃	1h	

REVISION	A 版
	NEW

DONGGUAN CITY KAIHUA ELECTRONICS CO., LTD 东 莞 市 凯 华 电 子 有 限 公 司	WRITTEN BY	CHECKED BY	APPROVED BY
	Chenjun		

No.	Item 项目	Test condition 试验条件	Performance 规格
2.3.5	Endurance (switching action) 耐久特性 （开关寿命）	1) D.C.12V 10mA resistance load D.C 12V 10mA 电阻负荷 2) Operation speed : 1 times / s 动作速度：2-3 次/ 秒 3) Push force : Maximum value of operation force 按力: 动作力规格值的上限 4) Operation number:50,000,000cycles 动作次数:50，000，000次	After endurance test, 寿命测试后, Contact resistance 30Ω max 接触电阻 30Ω以下 Variation rate of operation force shall be within ±30%to the value before testing 动作力的变化范围在初始值的±30%以内 No.2.1.2 and 2.2.2 shall Be satisfied 满足2.1.2 和2.2.2 项
2.3.6	盐雾实验 Salt Mist Test	试件在下述实验后测量： 1. 温度：35±5°C 2. 盐溶液浓度：5±1%（质量百分比）， 3. 试验时间：4 小时， 4. 试验后，将盐沉积物用水冲掉。 The switch shall be checked after following test: 1.Temperature: 35±5°C 2.Salt solution: 5±1%(Solids by mass) 3.Duration: 4 hours, 4.After immersing, salt deposit shall be removed by running water.	Contact resistance 200mΩ max No. 2.1.2 to 2.1.4 and No. 2.2.1 to 2.2.2 shall Be satisfied 接触电阻 200mΩ以下 满足2.1.2 到2.1.4 项、2.2.1 到2.2.2 项.
2.3.7	Shock 耐冲击性	Measure after test at a condition below 在下列条件下进行测试后的量度 Peak acceleration:80G 冲击加速度:80G Test time-6direction ,each 3 times total 18 times 测试次数-6 个方向，各3 次共计18 次。	No.2.1 and 2.2.1 to 2.2.2 shall be satisfied 第2.1 及2.2.1—2.2.2 都应符合要求

REVISION	A 版
	NEW

DONGGUAN CITY KAIHUA ELECTRONICS CO., LTD 东 莞 市 凯 华 电 子 有 限 公 司	WRITTEN BY	CHECKED BY	APPROVED BY
	Chenjun		

4. Precaution 注意事项

4.1 Soldering condition 浸焊条件

ITEM 项目	CONDITION 条 件
Preheat temperature 预热温度	110℃ max (Embilomental temperature of soldering surface of P. W. E) 110℃ 以下(印刷基板焊锡面周围的温度)
Preheat time 预热时间	60 sec, max 60 秒以内
Area of flux 助焊剂的面积	1/2 max of P. W. B. thickness 印刷基板厚度的1/2 以内
Temperature of solder 焊锡温度	260±5℃ 260±5℃
Time of immersion 浸焊时间	Within 5 sec 5 秒以内
Soldering number 浸焊次数	Within 2 times (But should bring down heat of the first soldering) 2 次以内 (但应把第一次焊锡的温度降下来)
Printed wiring board 印刷基板	Single sided copper-clad laminates 单面铜箔

1) After switches were soldered, please be careful not to clean switches with solvent
开关浸焊后,注意不要用溶剂清洗.

2) In the case of using soldering iron, soldering conditions shall be 280oC max and 3 sec. max
在使用铬铁的情况下，焊锡温度应在350±10℃ 以下, 3 秒以内.

3) Right after switches were soldered; please be careful not to load on the knobs of switches.
浸焊后,注意不要在顶部施加负荷.

4.2 Note(注意点)

1) Please be cautious not to give excessive static load or shock to switches.
注意不要施加超负荷的压力或晃动开关.

2) Please be careful not to pile up P. W. B. after switches were soldered.
开关焊接以后,印刷基板注意不要叠放.

3) Preservation under high temperature and high humidity or corrosive gas should be avoided especially. When you need to preserve for a long period, do not open the carton.
保管时尤其应注意避开高湿高温和有腐蚀性气体的环境.如需长时间保存,请不要打开包装箱.

4) Panasert RH and RH6 shall be used as the standard insert machine (use N type clinch).
使用标准插入机器PANASERT 和RH6（使用N 式钉）

5) CONTROL HAZARDOUS SUBSTANCE: THE PRODUCT SHOULD BE MEET ROHS SPECIFICATION.
产品应满足 ROHS 环境管理物质管制标准

KAILH-PG1280-SMT-LED

Emitter 外型图：

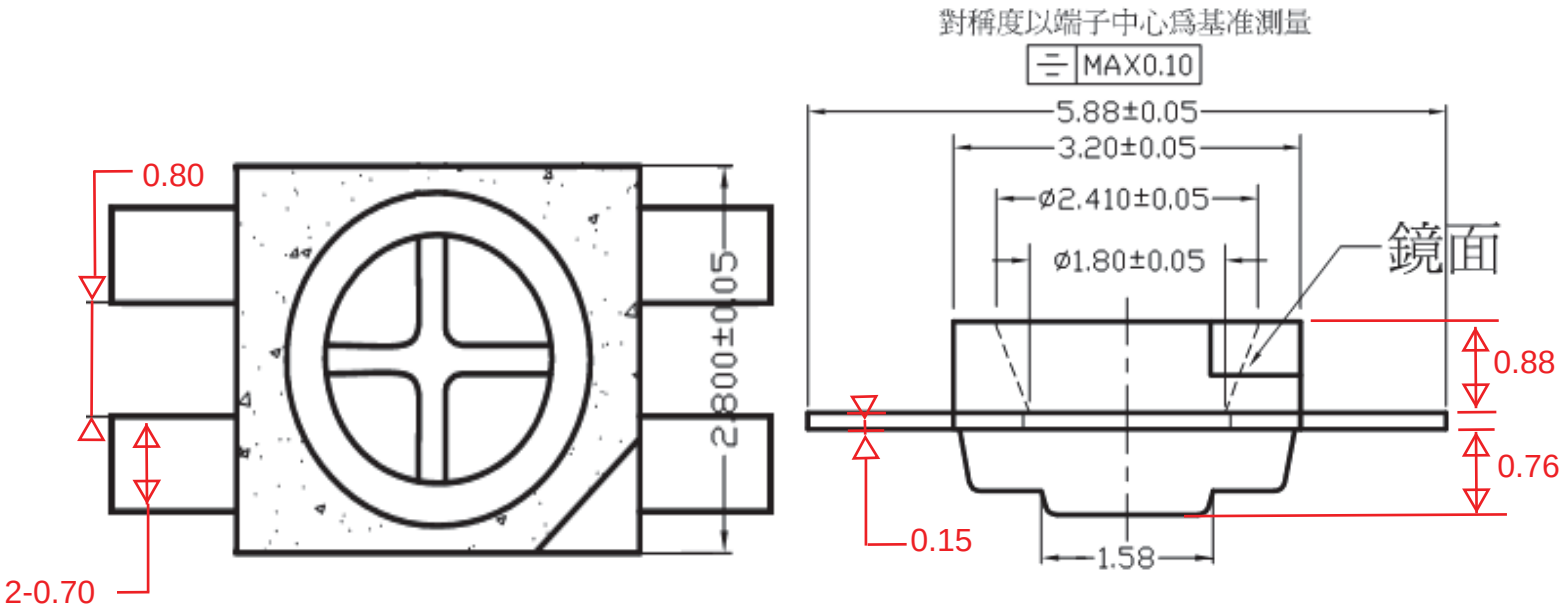

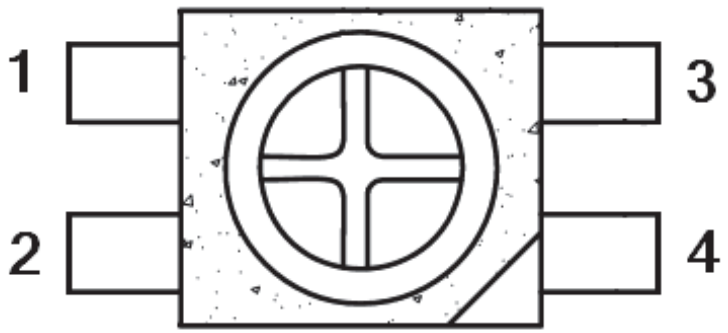

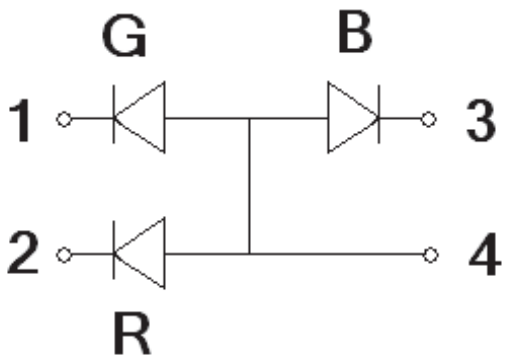

Note:

- Super High brightness of surface mount LED
- Sorting for Iv and Vf@20mA of if
- Compatible to IR reflow soldering.
- The tolerances unless mentioned is ±0.2mm, Unit = mm

KAILH-PG1280-SMT-LED

■ Absolute Maximum Rating 极限工作参数

Item 项目		Symbol 代号	Absolute Maximum Rating 极限工作参数	Unit 单位
Forward Current	正向电流	IF	20	mA
Peak Forward Current	瞬间脉冲电流	IFP	50	mA
ReverseVoltage	反向电压	VR	5	V
Electrostatic discharge	静电释放	ESD	1000	V
Operating Temperature	工作温度范围	TOPR	-35～+85	℃
Storage Temperature	存放温度范围	TSTG	-40～+90	℃
Soldering Temperature	最高焊接温度	TSOL	Reflow Soldering: 220℃ for 5 sec Hand Soldering: 260℃ for 3 sec	

■ Electro-Optical Characteristics (Ta=25℃)光电特性参数

Item 项目		Symbol 代号	Condition 测试条件		Min 最小值	Typ 典型值	Max 最大值	Unit 单位
Forward Voltage	正向电压	VF	IF=20mA	R	1.8	2.1	2.4	V
				G	2.7	3.0	3.3	
				B	2.8	3.1	3.4	
Light intensity	光强度	IV	IF=20mA	R	400	450	500	mcd
				G	900	950	1000	
				B	300	350	400	
Wavelength	波长	WD	IF=20mA	R	620	623	625	nm
				G	517	519	522	
				B	465	467	468	
Luminous Flux	光通量	Φ	IF=20mA	R	1.8	2.0	2.2	lm
				G	5.7	6.0	6.3	
				B	1.4	1.6	1.8	
Reverse current	逆向电流	IR	IF=20mA				5	uA
Viewing Angle	半光全角	2θ1/2	IF=20mA				120	deg
Recommend Forward Current 持续正向电流		IF(rec)	IF=20mA				20	mA

Notes:

1.Work absolute ratings Ta=25℃ 工作常规值 温度=25℃

2.Tolerance of measurement of forward voltage±0.1V 正向电压误差范围±0.1V

■ Soldering Profile Suggested

1、For Lead Solder

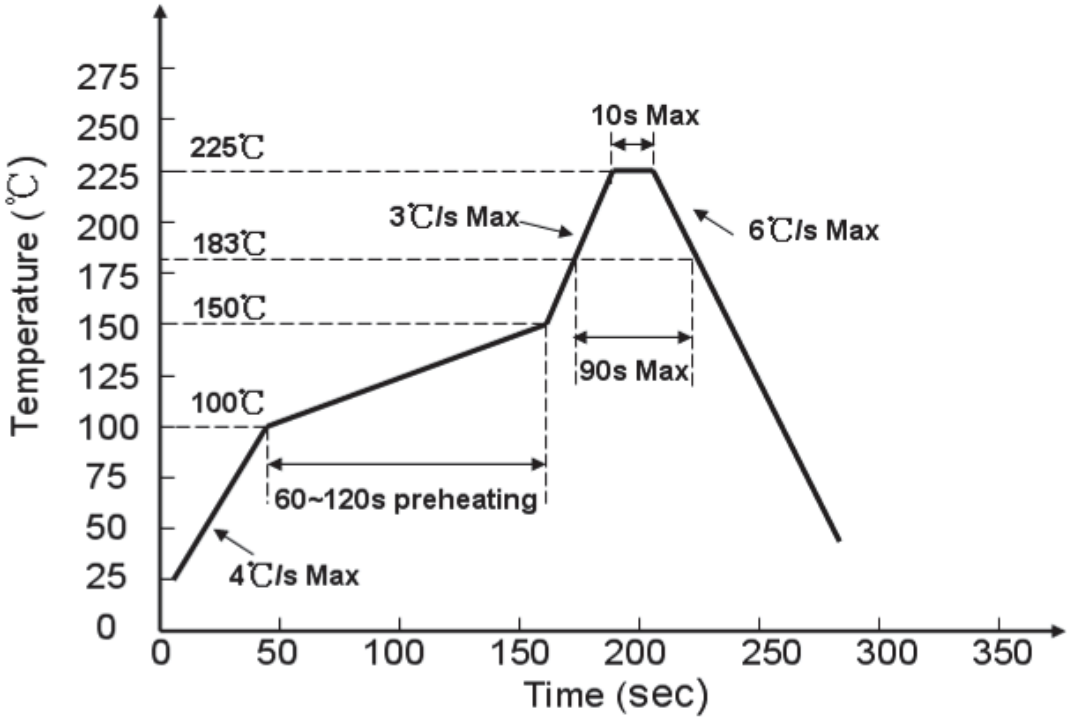

2、For Lead Free Solder

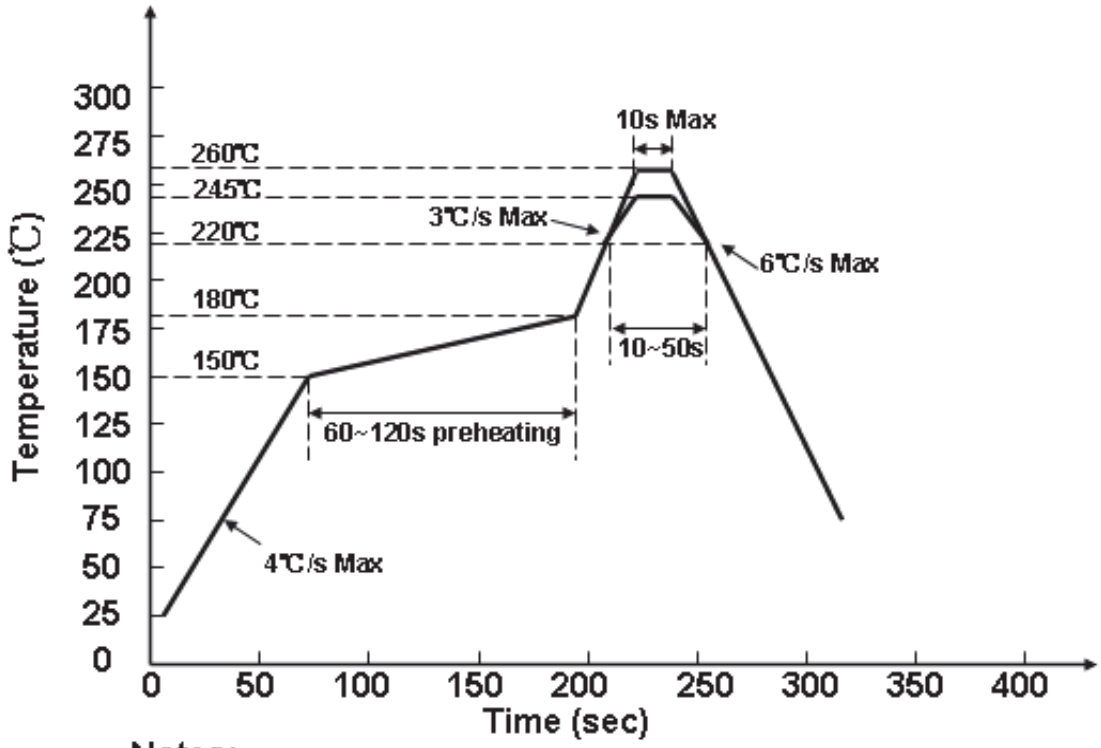

Notes:

We recommend the soldering temperature 245± 5℃ ;

The maximum temperature should be limited to 260 ℃.

NOTE:
Number of reflow process shall be less than 2 times and cooling process to normal temperature is
required between first and second soldering process.回流焊接应该少于 2 次，在第一和第二次焊接之间要求有冷却至常温的过程.

一、PRECAUTONS IN USE LED/使用 LED 注意事项；

LED Soldering condition/ LED 焊接条件；

1：烙铁焊接：烙铁最高 30W 尖端温度不超过 300℃；焊接时不超过 3 秒；

Manual soldering：iron Maximum 30W，iron bit temperature can not over 300 degree；soldering time should not be more than 3 seconds；

Cleanout/清洗；

当用化学品清洗 LED 胶体时须特别小心，因为有些化学品对胶体表面有损伤并引起褪色如三氯乙烯、丙酮，可用乙醇擦拭浸渍，时间在常温下不超过 2 分钟。

Utmost care must be taken when using chemical to clean LED，Some chemical can damage the surfaceof epoxy and will cause colour fading，such as trichloroethylene，acetone etc ethanol can be used to wipe and dip under normal temperature，but the time should not be more than 2 minutes。

ESD Protecction/静电防护；

静电和电流的急剧升高会对 LED 产生损伤，LED 系列产品使用时请使用防静电装置，如防静电带和手套。

Excessive ESD and current could damage the LED，protection equipment such bands when operate LED Product。

注意：使用时人体放电模式 HBM<1000V；机器放电模式 HBM<100V。

Attention：Human Boby discharge Mode HBM<1000V；Machine discharge Mode MM<100V

Reliability Test/可靠性试验；

我公司的 LED 产品不仅要经过生产线的自动分档测试仪检测、分档，而且要经过严格的可靠性试验，这些试验标准都是采用业内公认的 MIL-STD-。

Our LED chips are classified by machine in production line；and strictly perfromed the reliability test according to world wide standard MIL-STD-.